Cweco
Commercial Washroom Equipment Company Incorporated
P.O. Box 2456, Gardena, CA 90247-0456 310-538-9440
1-800-292-9326 Outside CA FAX: 310-715-9188 FAX 1-800-232-9326

5153
B5153

SINGLE ROBE HOOK

Specify 5153 (satin SS) or B5153 (polished SS)

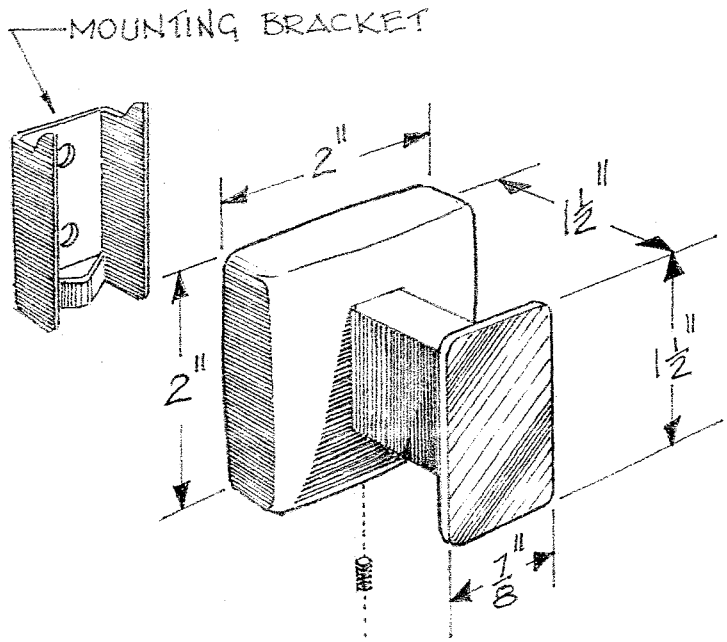

CONSTRUCTION: Inner wall flange- 16 ga. type 304 stainless steel.
Cover wall flange- 22 ga. type 304 stainless steel.
Projecting post- 22 ga. type 304 stainless steel.
Hook- 12 ga. type 304 stainless steel.
Wall plate- 16 ga. type 304 stainless steel.
All components welded construction designed for concealed screw mounting.

INSTALLATION: Secure stainless steel wall plate to stud or solid backing with mounting screws provided. Slip single robe hook over wall plate and tighten set screw until secure.

SPECIFICATION: Single robe hook shall be model 5153 (satin SS) or B5153 (polished SS) by CWECO, Inc.

Above data is applicable to production as of the date of this Technical Data Sheet. The manufacturer reserves the right to make changes and improvements in design without formal notice.